COLLECTIVE
CRANE HIRE

TRUCK CRANE

TL-250M

JAPANESE SPECIFICATIONS

TL

CARRIER MODEL	OUTLINE	SPEC. NO.
NISSAN DIESEL KC-KG520SN	Jib which swings from and stores under the boom	TL-250M-5-10101
MITSUBISHI KC-KS305R		TL-250M-5-20101

Control No. JA-01

Return to index

TL-250M

CRANE SPECIFICATIONS

CRANE CAPACITY

10.5m	Boom	25,000kg	at 3.5m	(8part-line)
14.2m	Boom	20,000kg	at 4.5m	(7part-line)
18.0m	Boom	16,000kg	at 5.0m	(7part-line)
21.7m	Boom	12,000kg	at 6.0m	(4part-line)
25.5m	Boom	11,500kg	at 6.0m	(4part-line)
29.2m	Boom	9,000kg	at 7.0m	(4part-line)
33.0m	Boom	7,000kg	at 8.0m	(4part-line)
8.7m	Jib	3,000kg	at 75 °	(1part-line)
14.5m	Jib	2,000kg	at 77 °	(1part-line)
Single top		3,400kg		(1part-line)

MAX.LIFTING HEIGHT

Boom 32.9m
Jib 47.1m

MAX.WORKING RADIUS

Boom 30.0m
Jib 36.9m

BOOM LENGTH

10.5m – 33.0m

BOOM EXTENSION

22.5m

BOOM EXTENSION SPEED

22.5m/125s

JIB LENGTH

8.7m, 14.5m

MAIN WINCH SINGLE LINE SPEED

High range: 110m/min (4th layer)
Low range: 61m/min (4th layer)

MAIN WINCH HOOK SPEED

High range: 13.7m/min (8 part-line)
Low range: 7.6m/min (8 part-line)

AUXILIARY WINCH SINGLE LINE SPEED

High range: 95m/min (2nd layer)
Low range: 52m/min (2nd layer)

AUXILIARY WINCH HOOK SPEED

High range: 95m/min (1 part-line)
Low range: 52m/min (1 part-line)

BOOM ELEVATION ANGLE

-3 °– 80 °

BOOM ELEVATION SPEED

-3 °– 80 °/70s

SWING ANGLE

360 °continue

SWING SPEED

2.5rpm

WIRE ROPE

Main Winch
16mm x 180m (Diameter x Length)
Spin-resistant wire rope
Auxiliary Winch
16mm x 105m (Diameter x Length)
Spin-resistant wire rope

BOOM

4-section hydraulically telescoping boom of box construction
(stage 2: sequential; stages 3,4: synchronized)

BOOM EXTENSION

2 double-acting hydraulic cylinders
1 wire rope type telescoping device
With flow regulator valve with pressure compensation

JIB

2 stages which swing from and store under the boom
Triple offset (5 °, 25 °, 45 °) type

SINGLE TOP

Single sheave. Mounted to main boom head for single line work.

HOIST

Driven by hydraulic motor and via planetary gear reducer.
With free-fall device.
Automatic brake (with foot brake for free-fall device)
2 single winches
With flow regulator valve with pressure compensation

BOOM ELEVATION

1 double-acting hydraulic cylinder
With flow regulator valve with pressure compensation

SWING

Hydraulic motor driven planetary gear reducer
Swing bearing
Swing free/lock changeover type
Hand brake

OUTRIGGERS

Fully hydraulic H-type (floats mounted integrally)
Slides and jacks each provided with independent operation device.

Fully extended width	6.1m
Middle extended width	4.0m
Minimum extended width	2.08m

FRONT JACK

Hydraulic type

MAX. VERTICAL LOAD CAPACITY OF OUTRIGGER

30.0t

HYDRAULIC PUMPS

4 variable gear pumps

HYDRAULIC OIL TANK CAPACITY

432 liters

SAFETY DEVICES

Automatic moment limiter (AML)
With working range limiting function
Working area control device
Outrigger extension automatic detector
Over-winding cutout device
Level gauge
Hook safety latch
Winch drum lock
Swing lock
Hydraulic safety valve
Telescopic counterbalance valve
Elevation counterbalance valve
Jack pilot check valve
Front jack over load alarm
Front jack grounding automatic detector

EQUIPMENT

Boom angle indicator
Oil cooler
Crane cab heater
Radio
Fan
Block

COLLECTIVE CRANE HIRE

CARRIER SPECIFICATIONS

MANUFACTURER
NISSAN DIESEL MOTOR CO., LTD.

CARRIER MODEL
KC-KG520SN

ENGINE
Model RF8
Type 4-cycle, V8-cylinder, direct-injection, water-cooled diesel engine
Piston displacement 16,991cc
Max. output 310PS at 2,200rpm
Max. torque 110kg·m at 1,400rpm

CLUTCH
Dry multi-plate coil spring type
With hydraulic air assistance

TRANSMISSION
6-forward and 1-reverse speeds
Constant-mesh gear (1st speed, reverse)
Synchronized-mesh gear (2nd – 6th speeds)

REDUCER
Hypoid gear type

FRONT AXLE
Reverse-elliot type I-beam

REAR AXLE
Full-floating type

SUSPENSION
Front: Semi-elliptic leaf spring type
With shock absorber
Rear: Equalizer beam type

STEERING
Recirculating ball screw type
With linkage power assistance

BRAKE SYSTEM
Service Brake
2-circuit air type 8-wheel internal expanding brake
Parking Brake
Mechanically operated, internal expanding duo-servo shoe type acting on drum at transmission case rear.
Auxiliary Brake
Electro-pneumatic operated exhaust brake

ELECTRIC SYSTEM
24 V DC. 2 batteries of 12V–115F51 (96Ah)

FUEL TANK CAPACITY
200 liters

CAB
Two-man type

TIRES
Front 10.00-20-14PR
Rear 10.00-20-14PR

STANDARD EQUIPMENT
Car heater
Car radio

GENERAL DATA

DIMENSIONS

Overall length		12,540mm
Overall width		2,490mm
Overall height		3,400mm
Wheel base		
	1,520mm + 3,530mm + 1,300mm = 6,350mm	
Tread	Front	2,030mm
	Rear	1,860mm

WEIGHTS

Gross vehicle weight		
Total		28,360kg
	Front	10,280kg
	Rear	18,080kg

PERFORMANCE

Max. traveling speed	70km/h
Gradeability (tan θ)	0.39
Min. turning radius	10.2m

COLLECTIVE CRANE HIRE

CARRIER SPECIFICATIONS

MANUFACTURER
MITSUBISHI MOTOR CORPORATION

CARRIER MODEL
KC-KS305S

ENGINE
Model 8DC9
Type 4-cycle, V8-cylinder, direct-injection, water-cooled diesel engine
Piston displacement 16,031cc
Max. output 310PS at 2,200rpm
Max. torque 107kg·m at 1,400rpm

CLUTCH
Dry single-plate coil spring type
With hydraulic air assistance

TRANSMISSION
6-forward and 1-reverse speeds
Constant-mesh gear (1st speed, reverse)
Synchronized-mesh gear (2nd – 6th speeds)

REDUCER
Hypoid gear type

FRONT AXLE
Reverse-elliot type I-beam

REAR AXLE
Full-floating type

SUSPENSION
Front: Semi-elliptic leaf spring type
Rear: Equalizer and torque rods

STEERING
Recirculating ball screw type
Integral power steering

BRAKE SYSTEM
Service Brake
2-circuit air type 8-wheel internal expanding brake
Parking Brake
Mechanically operated, internal expanding duo-servo shoe type acting on drum at transmission case rear.
Auxiliary Brake
Electro-pneumatic operated exhaust brake

ELECTRIC SYSTEM
24 V DC. 2 batteries of 12V–145F51 (112Ah)

FUEL TANK CAPACITY
200 liters

CAB
Two-man type

TIRES
Front 10.00-20-14PR
Rear 10.00-20-14PR

STANDARD EQUIPMENT
Car heater
Car radio

GENERAL DATA

DIMENSIONS

Overall length		12,540mm
Overall width		2,490mm
Overall height		3,400mm
Wheel base		
	1,450mm + 3,600mm + 1,350mm = 6,400mm	
Tread	Front	2,050mm
	Rear	1,845mm

WEIGHTS

Gross vehicle weight		
Total		28,450kg
	Front	10,070kg
	Rear	18,380kg

PERFORMANCE

Max. traveling speed	70km/h
Gradeability (tan θ)	0.41
Min. turning radius	11.0m

COLLECTIVE CRANE HIRE

TOTAL RATED LOADS

Unit : ton

360°	: Outriggers fully extended (6.1m) + Front jack
Over the sides	: Outriggers fully extended (6.1m)
Over the rear	: Outriggers fully extended (6.1m) Outriggers middle extended (4.0m) Outriggers minimum extended (2.08m)
Over the front	: Outriggers fully extended (6.1m) + Front jack Outriggers middle extended (4.0m) + Front jack

A / B	10.5m	14.2m	18.0m	21.7m	25.5m	29.2m	33.0m
3.0m	25.00	20.00	16.00				
3.5m	25.00	20.00	16.00	12.00			
4.0m	22.90	20.00	16.00	12.00	11.50		
4.5m	21.00	20.00	16.00	12.00	11.50		
5.0m	19.40	18.40	16.00	12.00	11.50	9.00	
5.5m	17.70	16.80	14.75	12.00	11.50	9.00	7.00
6.0m	16.20	15.30	13.70	12.00	11.50	9.00	7.00
7.0m	13.70	12.65	11.95	11.00	10.00	9.00	7.00
8.0m	11.40	10.65	10.55	10.20	8.90	8.20	7.00
9.0m		8.85	8.75	9.20	8.05	7.45	6.25
10.0m		7.20	7.10	7.50	7.30	6.75	5.70
12.0m		5.00	4.90	5.25	5.60	5.65	4.80
14.0m			3.50	3.85	4.15	4.30	4.10
16.0m			2.50	2.85	3.15	3.30	3.40
18.0m				2.15	2.40	2.55	2.65
20.0m				1.60	1.85	2.00	2.10
22.0m					1.40	1.55	1.65
24.0m						1.20	1.30
26.0m						0.90	1.00
28.0m							0.75
30.0m							0.50
θ (°)	0～80	0～80	0～80	0～80	0～80	0～80	0～80

A= Boom length B= Working radius
θ = Boom angle range (for the unladen condition)

COLLECTIVE CRANE HIRE

Unit : ton

360°	: Outriggers fully extended (6.1m) + Front jack
Over the sides	: Outriggers fully extended (6.1m)
Over the rear	: Outriggers fully extended (6.1m) Outriggers middle extended (4.0m) Outriggers minimum extended (2.08m)
Over the front	: Outriggers fully extended (6.1m) + Front jack Outriggers middle extended (4.0m) + Front jack

C	33.0m Boom + 8.7m Jib						33.0m Boom + 14.5m Jib					
D	5 °		25 °		45 °		5 °		25 °		45 °	
E (°)	B (m)	M	B (m)	M	B (m)	M	B (m)	M	B (m)	M	B (m)	M
80	7.9	3.00	10.7	1.70	12.5	1.00	9.9	2.00	14.2	0.90	17.5	0.60
77	10.2	3.00	12.9	1.70	14.5	1.00	12.6	2.00	16.6	0.90	19.6	0.60
76	11.0	3.00	13.6	1.70	15.2	1.00	13.4	1.85	17.4	0.90	20.3	0.60
75	11.8	3.00	14.3	1.67	15.8	0.96	14.2	1.74	18.1	0.87	21.0	0.57
70	15.2	2.20	17.6	1.44	18.9	0.86	18.2	1.35	21.9	0.80	24.4	0.53
65	18.5	1.75	20.8	1.25	21.9	0.80	21.9	1.10	25.4	0.72	27.5	0.49
60	21.7	1.40	23.7	1.10	24.7	0.75	25.5	0.90	28.7	0.64	30.3	0.46
55	24.6	1.10	26.5	0.95	27.2	0.70	28.9	0.73	31.7	0.56	33.0	0.43
50	27.3	0.70	29.0	0.65	29.5	0.60	31.9	0.55	34.4	0.45	35.3	0.40
46	29.3	0.45	30.8	0.45	31.1	0.40	34.1	0.35	36.4	0.30	36.9	0.25
45	29.8	0.40	31.2	0.40	31.5	0.35	34.6	0.30	36.8	0.25		
42	31.2	0.25	32.4	0.25								
θ (°)	41 ～ 80				44 ～ 80		44 ～ 80				45 ～ 80	

B= Working radius C= Jib length D= Jib offset
E= Boom angle M= Total rated loads
θ = Boom angle range (for the unladen condition)

COLLECTIVE CRANE HIRE

Unit : ton

360° : Outriggers middle extended (4.0m)
Over the front : Outriggers minimum extended (2.08m)
Outriggers fully extended (6.1m) + Front jack
Outriggers middle extended (4.0m) + Front jack

A / B	10.5m	14.2m	18.0m	21.7m	25.5m	29.2m	33.0m
3.0m	25.00	20.00	16.00				
3.5m	23.00	20.00	16.00	12.00			
4.0m	20.00	20.00	16.00	12.00	11.50		
4.5m	17.40	17.20	16.00	12.00	11.50		
5.0m	14.00	13.80	13.60	12.00	11.50	9.00	
5.5m	11.65	11.45	11.30	11.70	11.50	9.00	7.00
6.0m	9.85	9.70	9.60	10.00	10.40	9.00	7.00
6.5m	8.45	8.30	8.20	8.60	9.00	9.00	7.00
7.0m	7.35	7.20	7.10	7.50	7.85	8.05	7.00
7.5m	6.40	6.30	6.20	6.60	6.95	7.15	7.00
8.0m	5.65	5.55	5.45	5.85	6.15	6.35	6.50
9.0m		4.35	4.25	4.65	4.95	5.10	5.25
10.0m		3.40	3.30	3.70	3.95	4.10	4.35
12.0m		2.00	1.95	2.30	2.55	2.80	2.90
14.0m			1.05	1.40	1.65	1.85	2.00
15.0m			0.70	1.05	1.35	1.50	1.65
16.0m				0.80	1.05	1.20	1.35
17.0m					0.75	0.95	1.10
18.0m						0.75	0.90
θ (°)	0～80	0～80	22～80	35～80	42～80	48.5～80	54～80

A= Boom length B= Working radius
θ = Boom angle range (for the unladen condition)

COLLECTIVE CRANE HIRE

Unit : ton

360° : Outriggers middle extended (4.0m)
Over the front : Outriggers minimum extended (2.08m)
Outriggers fully extended (6.1m) + without front jack
Outriggers middle extended (4.0m) + without front jack

C	33.0m Boom + 8.7m Jib						33.0m Boom + 14.5m Jib					
D	5 °		25 °		45 °		5 °		25 °		45 °	
E (°)	B (m)	M	B (m)	M	B (m)	M	B (m)	M	B (m)	M	B (m)	M
80	7.9	3.00	10.7	1.70	12.5	1.00	9.9	2.00	14.2	0.90	17.5	0.60
77	10.2	3.00	12.9	1.70	14.5	1.00	12.6	2.00	16.6	0.90	19.6	0.60
76	11.0	3.00	13.6	1.70	15.2	1.00	13.4	1.85	17.4	0.90	20.3	0.60
75	11.7	2.65	14.3	1.67	15.8	0.96	14.2	1.74	18.1	0.87	21.0	0.57
70	15.0	1.45	17.5	1.15	18.9	0.86	18.0	1.10	21.9	0.80	24.4	0.53
66	17.5	0.80	19.9	0.65	21.3	0.60	20.8	0.60	24.5	0.45	26.8	0.35
65	18.1	0.65	20.4	0.55	21.8	0.50	21.4	0.50				
θ (°)	64 ～ 80						64 ～ 80		65 ～ 80			

B= Working radius C= Jib length D= Jib offset
E= Boom angle M= Total rated loads
θ = Boom angle range (for the unladen condition)

Unit : ton

Over the sides : Outriggers minimum extended (2.08m)

A / B	10.5m	14.2m	18.0m	21.7m	25.5m	29.2m	33.0m
3.0m	10.00	9.90	7.50				
3.5m	7.95	7.75	7.50	6.40			
4.0m	6.50	6.25	6.10	6.40	5.50		
4.5m	5.45	5.15	5.00	5.30	5.50		
5.0m	4.60	4.30	4.20	4.50	4.70	4.10	
5.5m	3.90	3.60	3.50	3.85	4.00	4.10	3.70
6.0m	3.30	3.05	2.95	3.30	3.50	3.55	3.70
7.0m	2.45	2.20	2.10	2.45	2.60	2.70	2.85
8.0m	1.80	1.60	1.45	1.80	2.00	2.10	2.20
9.0m		1.10	0.90	1.35	1.50	1.60	1.75
10.0m				0.85	1.10	1.25	1.35
θ (°)	0～80	40～80	53～80	58～80	63～80	66～80	69～80

A= Boom length B= Working radius
θ = Boom angle range (for the unladen condition)

COLLECTIVE CRANE HIRE

NOTES:

1. The total rated loads shown are for the case where the outriggers are set horizontally on firm level ground. The values above the bold lines are based on the crane strength while those below are based on the crane stability.
2. The weights of the slings and hooks (main hook: 280kg, auxiliary hook: 60kg) are included in the total rated loads shown.
3. Since the working radii are based on the actual values including the deflection of the boom, operations should be performed in accordance with the working radii.
4. Jib operations should be performed in accordance with the boom angle, irrespective of the boom length. The working radii are reference values for the case where the jib is mounted to a 33.0m boom.
5. Mark θ in the chart of total rated loads shows the boom elevation angle with no load.
6. The chart below shows the standard number of part lines for each boom length. The load per line should not exceed 3.2t for the main winch and 3.4t for the auxiliary winch.

A	10.5m	14.2m	18.0m	21.7m	25.5m	29.2m	33.0m	J
H	8	7	7	4	4	4	4	1

A= Boom length H= No. of part-lines
J= Jib/Single top

7. As a rule, free-fall operations should be performed only for lowering the hook alone. If a hoisted load must be lowered by free-fall operation, the load must be kept below 1/5 of the total rated load (the load per line must be 0.7t or less) and sudden braking operations must be avoided.
8. The total rated load for the single top shall be the value obtained by subtracting the weight of the hook mounted to the boom from the total rated load of the boom and must not exceed 3.4t.

COLLECTIVE CRANE HIRE

WORKING RADIUS - LIFTING HEIGHT

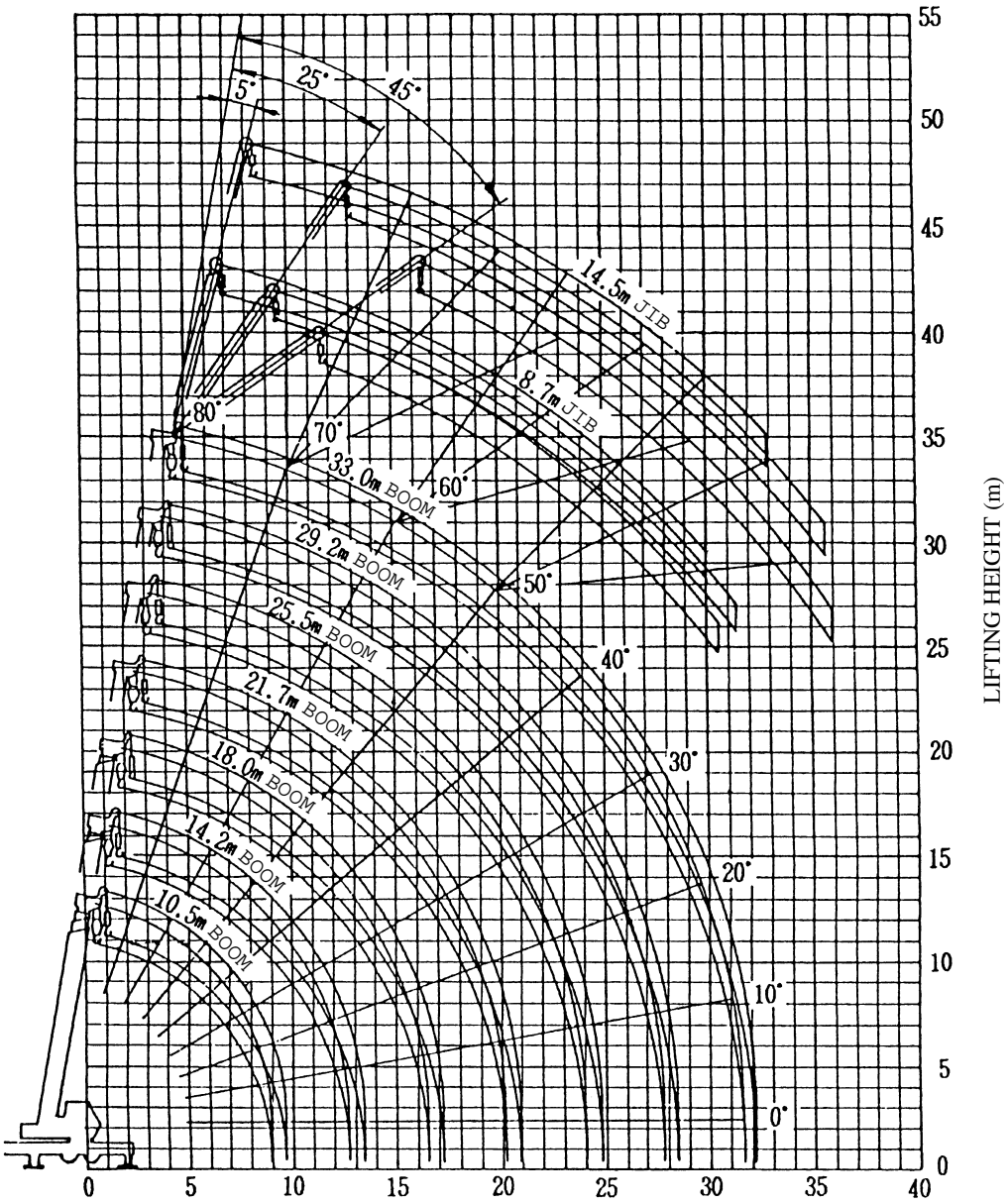

NOTES:

1. The deflection of the boom is not incorporated in the figure above.
2. The above chart is for the case where the outriggers are fully extended and where the front jacks are used (over 360°).

COLLECTIVE CRANE HIRE

DIMENSIONS

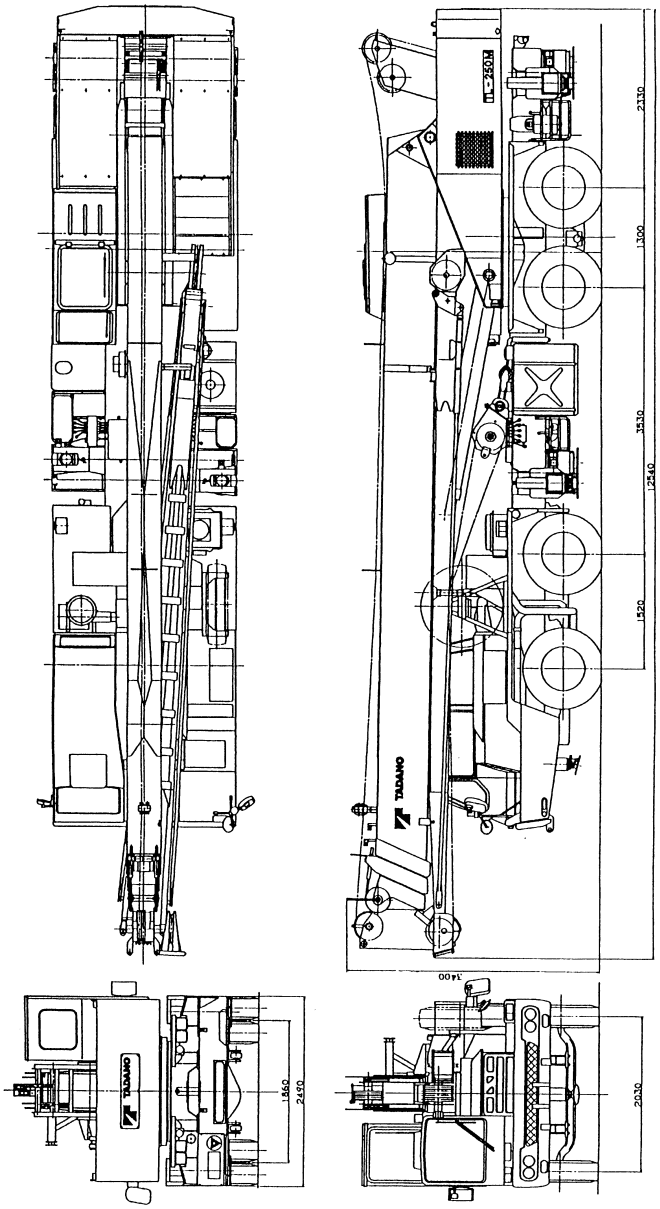

COLLECTIVE CRANE HIRE

DIMENSIONS

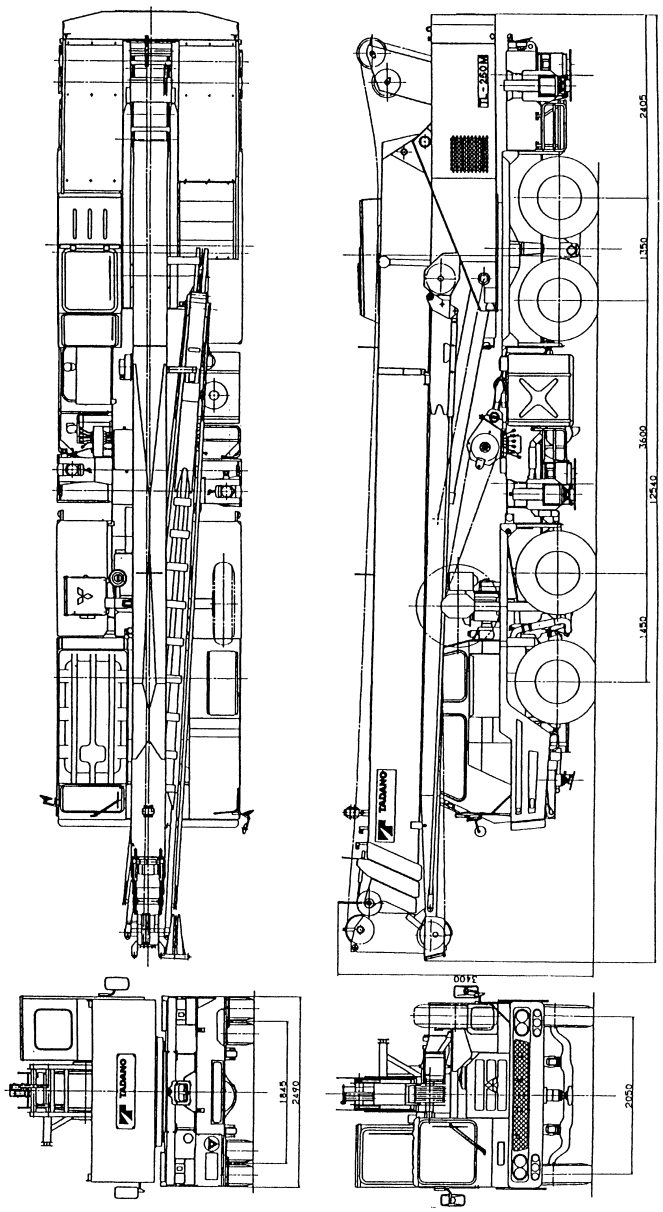

COLLECTIVE CRANE HIRE